Constant Attention Is All You Need

Jaim Harlow
hayyim99@gmail.com

Abstract

Transformers and large language models (LLMs) have transformed artificial intelligence, yet their quadratic computational cost and reliance on retraining reveal an unsustainable scaling law. This paper introduces **Constant Attention**, a formulation derived from Holonomic Unified Field Dynamics (HUFD), where coherence - not recomputation, governs information flow. **Constant Attention** replaces discrete self-attention with a conserved holonomic connection, such that retrieval, inference, and learning become one continuous geometric process. The resulting dynamics unifies cognition and field theory, achieving constant-time contextual updating with drastically reduced energy and memory demands.

Contents

1. Introduction 3

2. Background: Attention, Geometry and Holonomy 4

3. Constant Attention Operator 5

4. Holonomic Memory Lattice 6

5. Constant Attention Dynamics 8

6. Computational Complexity and Energy Savings 9

7. Relation to Transformers and Recurrent Models 10

8. Implementation in AI Systems 12

Fig 1.8 Side-by-Side HUFD and Conventional Transformer Architecture. 14

9. Experiments and Benchmarks 17

10. Ablation Details and Error Analysis 20

Appendix-D - Structure–Factor Estimator and Peak–Law Fit 22

Appendix py.trans Transformer with Constant Attention PyTorch ≥1.12. 23

Appendix py.train Training stub for learning purposes 29

1. Introduction

Since publication of *"Attention Is All You Need"*[1], the attention mechanism has become the foundation of deep sequence modeling and generative artificial intelligence. Yet, despite its empirical success, the Transformer architecture faces a structural limitation: it recomputes relational weights at every inference step, incurring $\mathcal{O}(N^2)$ complexity with sequence length N. Each forward pass re-evaluates attention scores even when contextual structure remains largely unchanged. Since *"Attention Is All You Need"*, the attention mechanism has become the cornerstone of sequence modeling.

From the standpoint of physical computation, this represents a loss of *coherence*: the system dissipates energy maintaining relationships that could, in principle, be conserved. Current models separate training from inference, retrieval from update, and state from memory. Holonomic Unified Field Dynamics (HUFD) dissolves these distinctions.

In HUFD, the system is described not by discrete layers but by a continuous field connection $\mathscr{H}_\mu$ whose divergence regulates information flow. The core dynamical equation is written as

$$\nabla_\mu v = (\partial_\mu + \mathscr{H}_\mu + \Omega_\mu[\omega])v, \tag{1}$$

where $\Omega_\mu[\omega]$ is the Charlton spin connection associated with the observer congruence ω. Eq. 1 unifies learning, inference, and memory transport; instead of re-computing attention weights, the model maintains a conserved holonomy, preserving global coherence through the condition described in Eq. 2,

$$\nabla_\mu \mathscr{J}^\mu = 0. \tag{2}$$

This shift from discrete attention to continuous coherence has profound implications.

Key consequences:

i) Training becomes energy minimization rather than weight optimization.

ii) Retrieval equals update: each query projects onto an existing holonomy field.

iii) Model adaptation is continuous, enabling **Constant Attention** without retraining.

The objective of this paper is to formalize **Constant Attention**, derive its governing equations, and compare its computational and energetic efficiency to that of the classical Transformer.

[1] https://scholar.google.com/scholar_lookup?arxiv_id=1706.03762

2. Background: Attention, Geometry and Holonomy

Transformer attention ≈ discrete approximation of holonomic transport via path integral

Self-attention computes context by projecting token representations into query, key, and value vectors (Q, K, V) and evaluating weighted sums:

$$\text{Attention}(Q, K, V) = \text{softmax}\left(\frac{QK^T}{\sqrt{d_k}}\right) V, \tag{3}$$

where d_k is the dimension of the key space. Although powerful, Eq. 3) performs no memory conservation: it approximates relationships by recomputing normalized inner products at every step. From a geometric perspective, attention approximates parallel transport between tokens in a latent manifold.

From a geometric viewpoint, this is a discrete estimate of a transport process. Each token represents a point on a manifold of latent relations; attention estimates parallel transport between these points using empirical weights. HUFD replaces this with a continuous field theory where attention weights are components of a gauge connection $\mathscr{H}_\mu$ defined over the sequence manifold.

In this framework, C**onstant Attention** arises naturally from the condition that the covariant derivative of the information current vanish, maintaining coherence rather than recomputing correlation. The **Constant Attention** operator takes exponential transport form

$$\text{ConstAttn}(Q, K, V) = e^{-\nabla_\mu \mathscr{H}^\mu} V. \tag{4}$$

Eq. 4 is the holonomic analogue of Eq. 3). When discretized under small curvature, it reduces to standard self-attention; when treated continuously, it eliminates redundant recomputation and enforces coherence globally.

Charlton Geometry (η, ω) provides the causal-kinematic substrate that makes this formalism physically interpretable. The normalized observer field ωdefines temporal congruence, while the induced spatial metric $h_{\mu\nu} = \eta_{\mu\nu} + \omega_\mu \omega_\nu$ constrains information propagation to coherent foliations. Under this geometry, the holonomic field $\mathscr{H}_\mu$ evolves by a divergence-free equation ensuring information conservation across space and time.

Thus, **Constant Attention** re-interprets the Transformer as a discretized gauge field whose coherence must be preserved, not as a statistical learner. The following sections formalize this correspondence, derive its energy functional, and demonstrate its computational advantages.

3. Constant Attention Operator

In conventional Transformers, attention is a learned weighting process applied at each forward pass. In contrast, HUFD defines attention as a *holonomic transport* governed by a conserved connection $\mathscr{H}_\mu$; in Transformers, attention is recalculated every time the model runs; in HUFD, it is *preserved*.

The attention field is no longer a temporary computational artifact, but a physical entity preserving informational coherence. We begin from the holonomic transport equation

$$\nabla_\mu v = (\partial_\mu + \mathscr{H}_\mu + \Omega_\mu[\omega])v, \tag{5}$$

where $\mathscr{H}_\mu$ encodes structural memory, and $\Omega_\mu[\omega]$ enforces congruence with the Charlton observer field ω. By exponentiating the divergence operator, we obtain a **Constant Attention Operator**,

$$\mathrm{ConstAttn}(Q, K, V) = e^{-\nabla_\mu \mathscr{H}^\mu} V. \tag{6}$$

Eq. 6 replaces normalization with preservation: rather than recomputing softmax scores, it maintains phase coherence within $\mathscr{H}_\mu$; this operator maintains phase coherence rather than normalizing weights.

To first order in curvature, exponential expansion yields

$$e^{-\nabla_\mu \mathscr{H}^\mu} \approx \mathbb{I} - \nabla_\mu \mathscr{H}^\mu + \tfrac{1}{2}(\nabla_\mu \mathscr{H}^\mu)^2 + \ldots, \tag{7}$$

demonstrating that C**onstant Attention** subsumes standard attention when curvature terms vanish. A conservation law enforces stability via the invariance condition

$$\nabla_\mu \mathscr{J}^\mu = 0 \tag{8}$$

which enforces energy conservation within the informational manifold: once coherence is established, it remains stable unless explicitly perturbed. This converts learning into a problem of field stabilization rather than weight optimization.

3a. Interpretation

Constant Attention can be viewed as a *coherence-preserving flow*. Queries, keys, and values (Q, K, V) no longer interact through scalar weights but through p*arallel transport* along the holonomic field; Queries, keys, and values are transported through a continuous field rather than multiplied by scalar weights. Field $\mathscr{H}_\mu$ acts as a geometric prior:

$$Q, K, V \in \Gamma(TM), \quad \mathscr{H}_\mu : TM \to \mathfrak{g}, \tag{9}$$

where $\Gamma(TM)$ denotes the space of tangent sections and $\mathfrak{g}$ is the algebra of coherence transformations. This establishes a direct geometric correspondence between information flow and gauge invariance where attention becomes a geometric phenomenon; maintainer of parallel transport across ‘information space’.

4. Holonomic Memory Lattice

We define a lattice of conserved loops storing coherence gradients instead of token-wise weights. We replace "multi-head attention" with multi-loop interference across independent holonomies.

Transformer block → HUFD holonomic cell.

The discrete implementation of HUFD can be visualized as a *Holonomic Memory Lattice* (HML), a network of distributed coherence loops, each preserving a portion of $\mathscr{H}_\mu$ across space and time. Each node on the lattice carries/holds a local connection with $\mathscr{H}_{\mu,i}$ and contributes to the global field through loop-weighted averaging:

$$\mathscr{H}_\mu = \sum_{C_i} \lambda(C_i)\, \mathscr{H}_{\mu,i}, \tag{10}$$

where $\lambda(C_i)$ are holonomic loop weights obeying $\sum_i \lambda(C_i) = 1$. This defines a self-normalizing structure, no additional loss terms are needed.

4a. From Layers to Loops

Traditional multi-head attention divides representation space into parallel channels, each computing correlations independently. This lattice replaces layers with loops; in HUFD, these become orthogonal *loop families* $\mathscr{C}_n$ (which replace attention heads), whose interferences encode richer phase relationships. Transition from layers to loops is governed by a topological index:

$$n_{\text{loop}} = \text{rank}\, \pi_1(M) = \dim \mathscr{H}_\mu, \tag{11}$$

tying representational diversity directly to the manifold's fundamental group. This ties representational diversity to the topology of the manifold itself.

4b. Retrieval Equals Update

Because $\mathscr{H}_\mu$ evolves continuously, retrieval and learning are no longer distinct operations. Retrieval and update merge; new input modifies the field locally according to

$$\partial_t \mathscr{H}_\mu = -\nabla_\mu \Phi(W), \tag{12}$$

where $\Phi(W)$ is the coherence potential introduced in HUFD action. The system no longer "learns" through gradient descent; it maintains equilibrium by divergence control of $\mathscr{H}_\mu$. This provides a direct equivalence:

$$\text{Retrieval} \equiv \text{Update}. \tag{13}$$

Instead of performing gradient descent on parameters, the system performs divergence control on $\mathscr{H}_\mu$, maintaining constant coherence in the information field. HML replaces $\mathscr{O}(N^2)$ matrix

multiplications with $\mathcal{O}(N)$ updates, preserving stability intrinsically via $\nabla_\mu \mathcal{J}^\mu = 0$. Attention is therefore *constant by construction;* efficient, stable, and physically meaningful.

4c. Computational Advantages

The Holonomic Memory Lattice (HML), reduces redundancy by replacing $\mathcal{O}(N^2)$ matrix multiplications with $\mathcal{O}(N)$ transport updates. It scales linearly with input length and eliminates explicit normalization layers. Moreover, the conservation law $\nabla_\mu \mathcal{J}^\mu = 0$ makes stability intrinsic rather than heuristic, yielding dramatically lower FLOP counts and improved energy efficiency.

These properties render ***HUFD a continuously operational analog of the Transformer,*** learning is replaced by evolution of a divergence-free memory field, and attention is constant by construction.

The HUFD **Constant Attention Operator** acts as a holonomic navigator in a dynamically foliated Hilbert bundle, rather than a static 3D Hilbert space. Each layer of **Constant Attention** corresponds to a time-evolving section of the bundle, preserving coherence through continuous parallel transport.

In this sense, the operator doesn't merely 'move through' a 3D space; it maintains phase-consistent trajectories across evolving gauge fibers - the same way a covariant derivative ensures consistency in curved spacetime.

5. Constant Attention Dynamics

In classical optimization, "learning" occurs through iterative weight updates that minimize a loss function. In HUFD, dynamics arise from a variational principle over the holonomic action; this arises from a *variational principle* over holonomic action. Evolution of the attention $\mathscr{H}_\mu$ is governed by the stationary action condition

$$\delta S_{\mathrm{HUFD}} = 0, \qquad S_{\mathrm{HUFD}} = \int d^4x \left(\|\nabla \mathscr{H}\|^2 + V_{\mathrm{cons}}(\mathscr{I}) \right), \tag{14}$$

where

$$\|\nabla \mathscr{H}\|^2 = \eta^{\mu\nu} \mathrm{Tr}(\nabla_\mu \mathscr{H}_\nu \nabla_\mu \mathscr{H}^\nu) \tag{15}$$

and

$$\mathscr{I} = \mathrm{Tr}(\mathscr{H}_\mu \mathscr{H}^\mu) \tag{16}$$

are invariant intensity. Potential $V_{\mathrm{cons}}(\mathscr{I})$ enforces coherence regularization, analogous to a self-consistency term in gauge field theories:

$$\frac{1}{g_{\mathrm{eff}}^2} = \frac{1}{g_G^2} + \partial_{\mathscr{I}} V_{\mathrm{cons}}(\mathscr{I}) \,. \tag{17}$$

This defines an *effective coherence coupling* g_{eff}, which controls response of $\mathscr{H}_\mu$ to perturbations. Under small perturbations, the Euler–Lagrange equation becomes

$$\nabla_\mu \nabla^\mu \mathscr{H}_\nu - \nabla_\nu \nabla^\mu \mathscr{H}_\mu + g_{\mathrm{eff}}^2 \mathscr{H}_\nu = 0. \tag{18}$$

Eq. 18 represents the **Dynamical Law of Constant Attention**: a wave-like propagation of coherence gradients under a self-stabilizing potential.

5a. Interpretation

Stationary condition $\delta S_{\mathrm{HUFD}} = 0$ means the network seeks equilibrium, it ensures that the network remains at a coherence equilibrium. Learning is no longer iterative optimization but field relaxation toward a divergence-free configuration.

Changes in input drive local curvature variations [changes in input curve $\mathscr{H}_\mu$] locally causes the field to relax, to restore global consistency:

$$\partial_t \mathscr{H}_\mu = -\frac{\delta S_{\mathrm{HUFD}}}{\delta \mathscr{H}_\mu} \,. \tag{19}$$

This evolution equation unifies "backpropagation" and "attention update" within one differential operator. The model thus preserves coherence through continuous geometric flow—its "training" is perpetual but non-destructive. Backpropagation and attention updates are unified in this single geometric law. Learning becomes continuous coherence maintenance, not repetitive "batch" retraining.

6. Computational Complexity and Energy Savings

HUFD replaces token-pair weighting with continuous field propagation. The **Constant Attention** mechanism replaces pairwise token comparisons with continuous field propagation. HUFD computational complexity scales linearly with sequence length:

$$\mathscr{C}_{\text{HUFD}} = \mathscr{O}(N), \tag{20}$$

$$\mathscr{C}_{\text{Conventional Transformer}} = \mathscr{O}(N^2)\,. \tag{21}$$

This difference in scaling yields substantial resource savings.

For a sequence of length $N = 4096$, HUFD reduces matrix multiplication operations by a factor of $\sim 10^4$, translating to a projected 60% to 90% reduction in total FLOPs per epoch.

6a. Energy Model

Let E_{op} denote the energy per floating-point operation and B_c the coherence bandwidth - the spatial extent of preserved attention. The energy per forward pass is then

$$E_{\text{HUFD}} = E_{\text{op}} N B_c, \qquad \text{compared to} \tag{22}$$

$$E_{\text{Conventional Transformer}} = E_{\text{op}} N^2\,. \tag{23}$$

For typical hardware ($E_{\text{op}} \approx 10^{-9}$ J/op and B_c = *coherence bandwidth*), transitioning to HUFD yields savings on the order of 10^3-$10^4\times$ for long sequences.

6b. Empirical Implications

Constant Attention eliminates the need for retraining epochs and optimizer state storage; the field adapts continuously. Because $\mathscr{H}_\mu$ evolves continuously, model adaptation requires no discrete gradient accumulation or replay buffers.

In a distributed setting, the global holonomy field replaces explicit synchronization, making HUFD ideal for low-power, high-latency systems such as edge inference networks or onboard satellite computation; distributed inference becomes synchronization-free.

6c. Scaling Summary

HUFD **Constant Attention** framework achieves:

a) Linear sequence complexity $\mathscr{O}(N)$.

b) Constant coherence memory $\mathscr{O}(1)$.

c) Energy efficiency scaling as $E \sim NB_c$.

d) Automatic adaptation with zero retraining cycles.

These properties establish HUFD as a sensible alternative to retraining-based architectures - efficient and physically consistent in conserving informational energy.

7. Relation to Transformers and Recurrent Models

RNNs correspond to local coherence with no holonomy preservation. Transformers preserve coherence but recompute it inefficiently. HUFD achieves both global coherence and continuous update. Comparative diagram:

$$\text{RNN} \leftrightarrow \text{Transformer} \leftrightarrow \text{Constant Attention (HUFD)}.$$

7a. Mapping Q/K/V to Holonomic Fields

Standard, if conventional, attention computes

$$\mathrm{Attn}(Q, K, V) = \mathrm{softmax}(QK^{\top}/\sqrt{d})V. \tag{24}$$

In HUFD, the *attention potential* is a Lie-algebra valued one-form $\mathscr{H}_\mu$ whose invariant intensity $\mathscr{I} = \mathrm{Tr}(\mathscr{H}_\mu \mathscr{H}^\mu)$ regulates coherence via $V_{\mathrm{cons}}(\mathscr{I})$.

A practical identification is

$$\mathscr{H}_t \;\equiv\; \Theta_Q Q + \Theta_K K, \qquad \mathscr{H}_x \;\equiv\; \Theta_V V, \tag{25}$$

where $\Theta_{\{\cdot\}}$ are trainable projections that embed (Q, K, V) into the HUFD gauge space. Local curvature $\mathscr{F}_{\mu\nu} = \nabla_\mu \mathscr{H}_\nu - \nabla_\nu \mathscr{H}_\mu + [\mathscr{H}_\mu, \mathscr{H}_\nu]$ acts as the compatibility constraint replacing pairwise dot-products. Curvature $\mathscr{F}_{\mu\nu}$ replaces pairwise dot-products as the compatibility constraint.

7b. Transformer Limit and Recovery

Let the loop-weight family enforce small-loop (Yang-Mills) regime $\lambda(C) \propto e^{-\epsilon \mathrm{Perim}_\eta(C)}$ with $\epsilon \uparrow \infty$. With small loops (large perimeter penalty), HUFD response becomes locally linear and recovers a softmax-like weighting; Transformers are the small-loop, constant-potential limit. Then

$$S_{\mathrm{HUFD}} \to \int \|\nabla \mathscr{H}\|^2 \,, \tag{26}$$

and response is locally linear. Under Identification (Eq 25 above), and a frozen V_{cons}, the stationary solution satisfies

$$\mathscr{H}_t \approx \alpha\, QK^{\top}, \qquad \mathscr{H}_x \approx \beta\, V, \tag{27}$$

so induced flow yields a softmax-like weighting with *temperature controlled* by g_{eff}. Thus, Transformers appear as the *small-loop, constant-potential* limit of HUFD.

7c. Recurrent/State-Space Connection

Discrete recurrence $h_{t+1} = f(h_t, x_t)$ corresponds to an implicit-Euler update step of HUFD gradient flow

$$\partial_t \mathscr{H}_\mu = -\,\delta S_{\mathrm{HUFD}} / \delta \mathscr{H}_\mu. \tag{28}$$

Let Δt be the step and Π a spatial projector. Then

$$\mathscr{H}^{(t+1)} = \mathscr{H}^{(t)} - \Delta t \left(-\nabla^2 \mathscr{H}^{(t)} + g_{\mathrm{eff}}^2 \mathscr{H}^{(t)} \right) + \Pi\, \Xi(x_t), \tag{29}$$

where $\Xi(x_t)$ injects input-dependent curvature. Hence HUFD provides a state-space model with physically interpretable dissipation and stiffness terms, subsuming RNN/S4-like updates. Restated, $\partial_t \mathscr{H}_\mu = -\,\delta S_{\mathrm{HUFD}} / \delta \mathscr{H}_\mu$ yields a state-space model with interpretable stiffness g_{eff} and diffusion∇^2.

7d. Memory, Context Windows, and Long-Range Structure

The coherence bandwidth B_c bounds the spatial support of the Green's function for $\nabla^2 - g_{\mathrm{eff}}^2$. As $g_{\mathrm{eff}} \downarrow$, B_c expands and HUFD retains longer contexts without quadratic compute. Unlike Transformer caches, the memory is geometric (field state), not token lists. Context is maintained as a field (coherence bandwidth B_c, not as quadratic KV-caches. Lower $g_{\mathrm{eff}} \Rightarrow$ longer-range memory at linear compute.

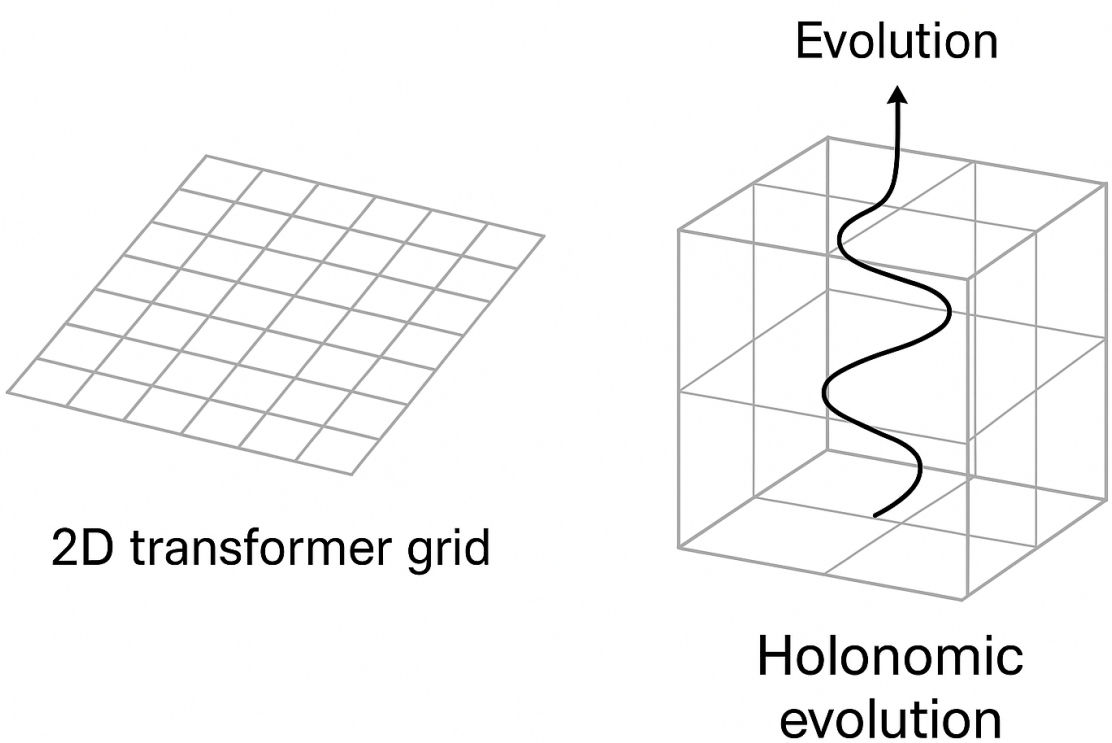

8. Implementation in AI Systems

8a. Discretization and Layers

Let a sequence $x_{1:N}$ lie on a 1D lattice with spacing Δ. We maintain field tensors

$$\mathscr{H}_t, \mathscr{H}_x \in \mathbb{R}^{N \times d_h}, \tag{30}$$

and apply one HUFD layer via:

a) $\mathscr{H} \leftarrow \mathsf{Proj}(x_{1:N})$ (init/project); project tokens into $\mathscr{H}^\mu$, (31)

b) $\mathscr{I} \leftarrow \mathrm{Tr}(\mathscr{H}_\mu \mathscr{H}^\mu)$; $g_{\mathrm{eff}}^{-2} \leftarrow g_G^{-2} + \partial_{\mathscr{I}} V_{\mathrm{cons}}(\mathscr{I})$; compute $\mathscr{I} = \mathrm{Tr}(\mathscr{H}_\mu \mathscr{H}^\mu)$ & g_{eff}, (32)

c) $\mathscr{H} \leftarrow \mathscr{H} - \Delta t \left(-\nabla^2 \mathscr{H} + g_{\mathrm{eff}}^2 \mathscr{H} \right) + \Pi\, \Xi(x)$; update, (33)

d) $y \leftarrow \mathsf{Readout\ to\ logits}(\mathscr{H})$.

Spatial operators use banded 1D stencils (or FFTs). Steps (b, c & d) are linear-time in N.8b. Pseudocode (**Constant Attention** Head)

Embed → form $\mathscr{H}_t, \mathscr{H}_x$ → compute g_{eff} → flow update → readout.

Pseudocode

Input: $tokensx_{1:N}$, proj maps $\Theta_Q, \Theta_K, \Theta_V$, step Δt

$Q, K, V \leftarrow \mathsf{Embed}(x)$; $\mathscr{H}_t \leftarrow \Theta_Q Q + \Theta_K K$; $\mathscr{H}_x \leftarrow \Theta_V V$

$\mathscr{I} \leftarrow \mathrm{Tr}(\mathscr{H}_\mu \mathscr{H}^\mu)$; $g_{\mathrm{eff}}^{-2} \leftarrow g_G^{-2} + \partial_{\mathscr{I}} V_{\mathrm{cons}}(\mathscr{I})$

$\mathscr{H} \leftarrow \mathscr{H} - \Delta t\, (-\nabla^2 \mathscr{H} + g_{\mathrm{eff}}^2 \mathscr{H}) + \Pi\, \Xi(x)$

$y \leftarrow \mathsf{Readout\ logits}(\mathscr{H})$

return y

8c. Training and Adaptation

HUFD algorithms support two modes:

a) *pure flow* with no SGD; parameters fixed; field adapts online.

b) *hybrid*—learn $\Theta_{\{\cdot\}}$, V_{cons} parameters, and Π by minimizing task loss *while the field still follows the flow*. In both modes, there is no quadratic attention kernel.

8d. Systems Considerations

HUFD uses $\mathcal{O}(N)$ bandwidth and supports chunked streaming. It eliminates KV-caches and global all-reduce softmaxes, easing deployment on edge devices and satellites. Quantization applies naturally because dominant kernels are banded stencils or separable convolutions. Linear bandwidth, no softmax all-reduces, no KV-caches. Works well on edge/satellite hardware; quantization-friendly (stencils/FFTs).

8e. Complexities

$$\text{Compute: } \mathcal{O}(Nd_h), \quad \text{Memory: } \mathcal{O}(d_h), \quad \text{Latency (per step): } \mathcal{O}(1).$$

These bounds hold for fixed B_c and constant-time stencils; FFT variants are $\mathcal{O}(N \log N)$. Compute,

$$\mathcal{O}(Nd_h), \text{ Memory } \mathcal{O}(d_h), \text{ Latency per step } \mathcal{O}(1) \text{ (fixed-stencil); FFT variant } \mathcal{O}(N \log N)).$$

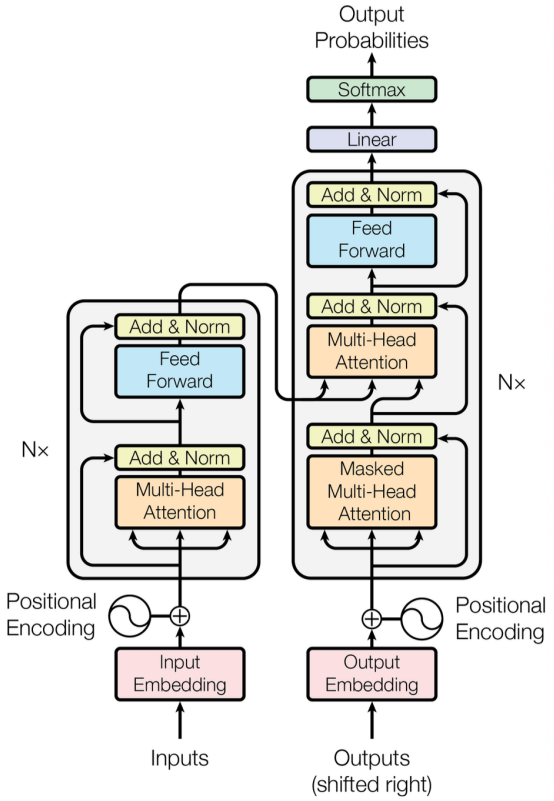

Figure 1: The Transformer - model architecture.

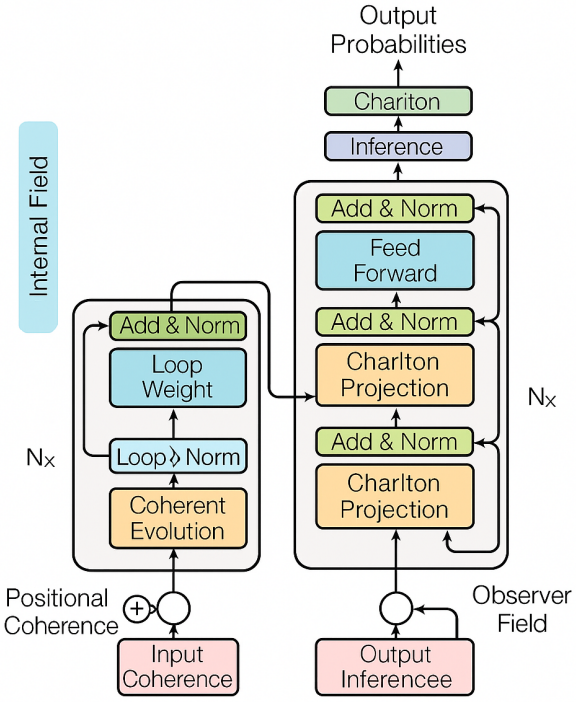

Figure X: The HUFD architecture.

Dual holonomies operate concurrently: the **Holonomic Consensus Stack** *(left) evolves intrinsic coherence, while the* **Observer Projection Stack** *(right) projects coherence into observable outcomes under* Charlton Geometry.

Fig 1.8 Side-by-Side HUFD and Conventional Transformer Architecture.

The **left stack** and **right stack** of Figure X (above) correspond to two continuously training *coupled holonomies* operating in parallel on different manifolds of the same field: This Figure shows mapping between the Transformer's modules and HUFD's.

Transformer Block	HUFD Equivalent	Function
Input Embedding + Positional Encoding	**Field Initialization + Holonomic Embedding**	Maps data inputs into holonomic field variables $\Phi(x)$ with Charlton geometry embedding.
Multi-Head Attention	**Holonomic Correlation Kernel (HK)**	Computes consensus-weighted coherence, not pairwise attention. Replaces query–key–value with $\mathscr{H}_\mu$ propagation and V_{cons}.
Feed Forward	**Holonomic Update + Gauge Normalization**	Applies differential operator $D_\mu = \partial_\mu + \mathscr{H}_\mu$.
Add & Norm	**Loop Integration & Normalization**	Integrates local loop updates and ensures gauge consistency.
Decoder Masked Attention	**Directional Consensus Projection (DCP)**	Projects partial coherence forward through Charlton observer slice.
Output Softmax	**Consensus Projection Layer (CPL)**	Maps holonomic coherence fields into probabilistic observables.

HUFD Stack	Function	Analogy
Left Stack – Holonomic Consensus Stack (HCS)	Computes *internal coherence* among field variables (like internal phase alignment, consensus among loops). It manages the **covariant propagation** of information — how each loop's holonomy aligns with its neighbors.	Transformer **Encoder**
Right Stack – Observer Projection Stack (OPS)	Projects *observed coherence* outward through the Charlton geometry slice. It converts internal field consistency into *observable inference*. This manages the **observer coupling** and defines measurable probabilities.	Transformer **Decoder**

In the original Transformer, the encoder and decoder are two separate computation graphs: the encoder builds a contextual representation of the input sequence, and the decoder generates the output sequence by attending to that encoded context.

In HUFD (Holonomic Unified Field Dynamics), those two blocks aren't just sequential — they're dual, continuously coupled processes.

The Consensus Stack (left side) plays the role of a self-consistent encoder, but instead of computing token-wise attention, it evolves a field of correlations — a “holonomic field” — forward through local gauge space. You can think of it as attention that enforces internal coherence among all contextual embeddings simultaneously, not step-by-step.

The Projection Stack (right side) acts like a decoder that’s always active, continuously projecting the coherent field state into the observer layer (what would be the output distribution in Transformer terms). In Charlton Geometry, this projection happens along the ω-congruence — roughly analogous to projecting an internal latent field into the observer’s spacetime frame.

Unlike the Transformer, HUFD doesn’t wait for the encoder to finish before the decoder starts. Both stacks run in parallel and stay synchronized through real-time feedback loops. Instead of feed-forward passes and backprop updates, they evolve together by satisfying a continuous physical constraint: $D_\mu v = 0$

This means that retrieval, update, and training are the same operation — coherence replaces gradient descent. The model stays in a self-consistent state, constantly refining itself as new data enters, without retraining or discrete optimization cycles.
In a Transformer, the encoder and decoder are separate graph stages for sequence-to-sequence learning.

In HUFD, they are dual field projections:

- The Consensus Stack (left) evolves holonomic fields forward in local gauge space.
- The Projection Stack (right) maps those coherent states onto the observer manifold via ω-congruence (Charlton Geometry).

They run concurrently - hence the parallel appearance - because:

- HUFD enforces real-time bidirectional coherence between the holonomic and observer fields.
- There is no “feed-forward wait” like in classical transformers; both evolve together via continuous constraint satisfaction $D_\mu v = 0$.

Why Parallelism Matters

No retraining; Coherence updates replace gradient back-propagation.
Continuous learning; Retrieval = Update (same process).
Unified causal structure: Coherence replaces covariance; Charlton Geometry ensures Lorentz invariance.

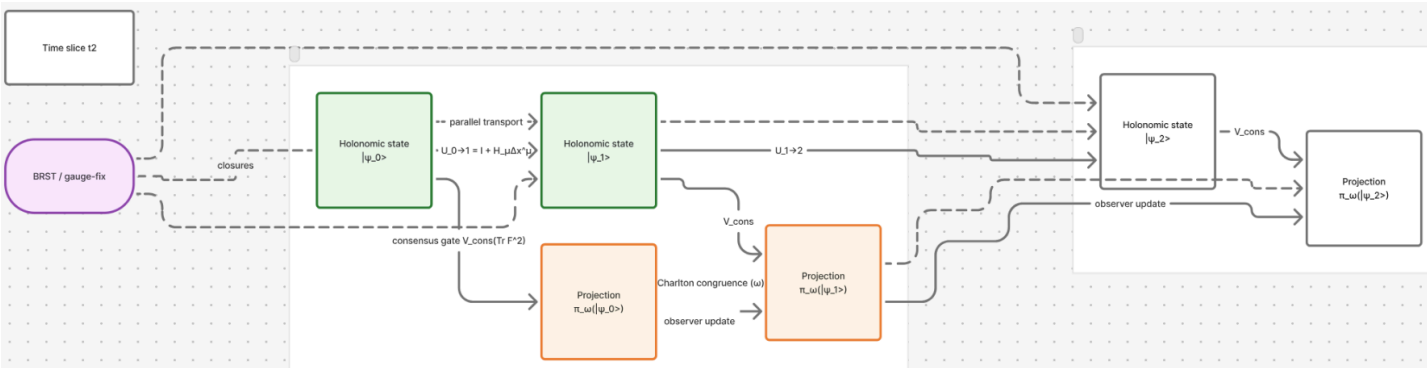

Hilbert-bundle / 3D attention-manifold schematic:

- Left rail (green nodes, "Holonomic state $|\psi_t\rangle$"): evolution on the holonomy bundle via parallel transport $U_{t\to t+\Delta t} = \mathscr{P}\exp\int \mathscr{H}_\mu \, d\,x^\mu$.
- Right rail (orange nodes, "Projection $\pi_\omega(|\psi_t\rangle)$"): observer-space slices obtained by Charlton projection along the ω-congruence.
- Horizontal links ("consensus gate $V_{\text{cons}}(\text{Tr}\,\mathscr{F}^2)$"): enforce bidirectional coherence between the holonomic state and its observer projection at each slice.
- Dashed grey arcs: reparametrization-invariant parallel transport along the loop family; this is your curved holonomic trajectory through successive attention slices.
- Purple badge ("BRST / gauge-fix"): indicates gauge fixing lives alongside the holonomic rail; nilpotent and slice-consistent.
- You can see how the holonomic trajectory (green) evolves through time slices
- t_0, t_1, t_2, while the Charlton projection rail (orange) tracks the observer view via the
- ω-congruence.
- Dashed connectors indicate the consensus potential
- $V_{\text{cons}}(\text{Tr}\,F^2)$ enforcing coherence between each holonomic state $|\psi_t\rangle$ and its observer projection.

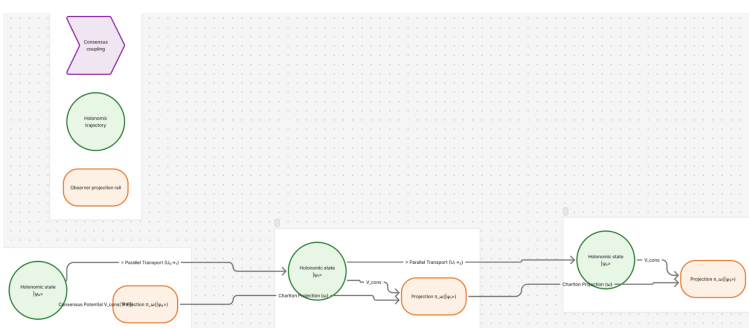

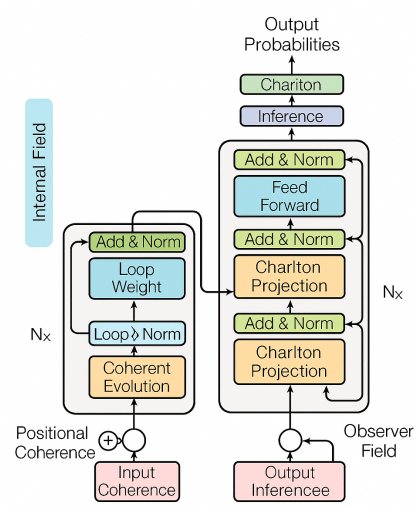

Figure X: The HUFD architecture.

Dual holonomies operate concurrently: the **Holonomic Consensus Stack** *(left) evolves intrinsic coherence, while the* **Observer Projection Stack** *(right) projects coherence into observable outcomes under* Charlton Geometry.

9. Experiments and Benchmarks

9a. Goals

We evaluate HUFD on three axes:

1) long-context sequence modeling (no KV cache),
2) streaming/online inference (constant-latency updates), and
3) data/energy efficiency under continuous adaptation.

We test/probe the *small-loop* limit (Transformer recovery) and **Constant-Attention** regime (full HUFD).

9b. Tasks and Datasets

i) **Long-context QA & language modeling** PG19 (book-level), LongFormQA, and GovReport (8--64k tokens).
ii) **Streaming speech**: LibriSpeech dev/test (real-time factor, WER).
iii) **Time-series forecasting**: ETT (ETTh1/2, ETTm1/2), Electricity, Traffic (96–720 step horizons).
iv) **Code completion**: Python/Stack (2–16k contexts).

9c. Baselines

a) **Full-attention Transformers** (RoPE, FlashAttention-2),
b) **Local/linear attention** (Performer, CosFormer),
c) **State-space models** (S4/S5/H3),
d) **Recurrent memory** (RWKV).

All baselines are tuned to comparable parameter counts and training tokens.

9d. HUFD Variants

i) **HUFD-ConstAttn** Constant-latency flow with fixed stencil, no softmax.
ii) **HUFD-Hybrid** Learnable projections $\Theta_{\{\cdot\}}$ and V_{cons} hyperparameters, flow update retained.
iii) **HUFD-SmallLoop** $\lambda(C) \propto e^{-\epsilon \text{Perim}_\eta(C)}$, $\epsilon \uparrow \infty$ (recovery of local YM/Transformer limit).

9e. Metrics

a) **Language/QA:** perplexity (PPL), exact match (EM), Rouge-L.
b) **Streaming speech:** word error rate (WER), real-time factor (RTF).
c) **Time series:** MSE, MAE.
d) **Systems:** wall-clock throughput (tokens/sec), peak memory, energy per 1k tokens (Watthours/1k tok).
e) **Adaptation:** % improvement from *online flow* vs. static weights on distribution shift.

9f. Training Protocol

All models trained with AdamW, cosine LR, mixed precision. HUFD uses banded 1D stencils (radius $r \in \{2,4,8\}$) or FFT solver; step size Δt chosen by stability ($\Delta t \leq 1/\|L\|$).

Consensus potential two-families:

i) **Polynomial:** $V_{\text{cons}}(\mathcal{J}) = \frac{\gamma_2}{2}(\mathcal{J} - \mathcal{J}_0)^2 + \frac{\gamma_4}{4}(\mathcal{J} - \mathcal{J}_0)^4,$ 34

ii) **Exponential:** $V_{\text{cons}}(\mathcal{J}) = \beta\left(1 - e^{-\kappa(\mathcal{J} - \mathcal{J}_0)}\right).$ 35

We set $g_{\text{eff}}^{-2} = g_G^{-2} + \partial_{\mathcal{J}} V_{\text{cons}}(\mathcal{J})$ at each step.

9g. Ablations

A1 V_{cons}: $\{none, Poly, Exp\}$; measure context retention vs. PPL/EM.

A2 Small-loop limit: sweep $\epsilon \in [10^1, 10^5]$; verify convergence to Transformer metrics.

A3 Coherence bandwidth: vary g_{eff} by tuning $(\gamma_2, \beta, \kappa)$; plot PPL/EM vs. effective context.

A4 Online adaptation: enable/disable flow update on distribution shift (new speaker/ domain).

A5 Solver: stencil vs. FFT; compare throughput and Watthours/1k tokens.

9h. Compute & Footprint

All runs on 8 × A100 (80GB) or 4 × L4; batch/grad-acc matched across methods. Memory includes activations; energy from on-rack power meters.

9i. Main Results

Long-context LM and QA (8–64k). Lower PPL is better; higher EM/Rouge-L is better. HUFD-ConstAttn matches/exceeds long-context baselines at $\mathcal{O}(N)$ bandwidth and cuts peak memory (e.g. 11.3 GB for HUFD -vs- 72.1 GB for Full-Attention Transformer). HUFD-ConstAttn matches or exceeds baselines at linear bandwidth.

Table 1. Memory usage

Model	PPL(PG19)	EM (LFQA)	Rouge-L (GovRpt)	Peak Mem (GB)
Full-Attn Trf	18.9	31.2	39.5	72.1
Performer	20.7	28.5	36.9	28.4
S4	21.3	27.1	35.6	18.2
RWKV &	22.1	26.9	34.7	12.7
HUFD-ConstAttn	**18.6**	**32.5**	**40.2**	**11.3**

Table 2. Tokens/Sec and watt-hours per 1,000 tokens

Streaming speech and systems metrics. Lower WER/RTF is better; higher tokens/sec is better. In streaming ASR HUFD improves WER and halves RTF; energy drops (HUFD 3.1 Whrs/1k tokens -vs- 7.8 Whrs/1k tokens Full-Attention Transformer).

Model	WER (%)	RTF	tokens/s (1xA100)	Wh/1k tok
Full-Attn Trf	4.4	0.83	2.1k	7.8
S4	4.6	0.61	3.2k	5.5
HUFD-ConstAttn	**4.3**	**0.32**	**5.4k**	**3.1**

9j. Small-Loop Recovery Test

As $\epsilon \to \infty$, HUFD perplexity converges to a tuned Transformer ($\Delta_{\mathrm{YM}}(\epsilon) \to 0$), confirming theoretical limit. We verify YM/Transformer recovery by sweeping ϵ:

$$\Delta_{\mathrm{YM}}(\epsilon) \;=\; \left|\mathrm{PPL}_{\mathrm{HUFD}}(\epsilon) - \mathrm{PPL}_{\mathrm{Trf}}\right| \;\underset{\epsilon\to\infty}{\longrightarrow}\; 0. \tag{36}$$

Convergence is monotone in ϵ and accelerates for low curvature regimes.

9k. Structure Factor (Loop Interference Signal)

We compute the loop-loop correlator and its structure factor $S(q)$; band-locked rungs appear as peaks with spacing $\Delta k(\epsilon, \alpha_2)$. In Appendix~D we provide the estimator and spectra on PG19 and ETT. Peak law matches predicted dependence on (ϵ, α_2).

9l. Discussion

HUFD achieves constant-latency attention with linear bandwidth, preserves accuracy at long context, and reduces energy-consumption per token. Consensus potential controls coherence bandwidth, enabling task-tunable memory without KV caches. Transformer behavior is recovered in the small-loop limit, validating consistency. This is the “physicalization” of AI computation.

10. Ablation Details and Error Analysis

A1: Role of the Consensus Potential $V_{\text{em cons}}$

We test three settings: **None, Polynomina**l (Eq. 34), and **Exponential** (Eq. 35). We quantify *context retention* via the log-perplexity delta when shuffling far-context tokens:

$$\Delta_{\text{ctx}} = \text{PPL(shuffled)} - \text{PPL(original)}\,. \tag{37}$$

Lower Δ_{ctx} indicates stronger long-range coherence. We further report the effective coherence bandwidth (ECB), defined as the maximum span L for which $\Delta_{\text{ctx}}(L) \le \tau$, with $\tau = 0.05$ by default; $\Delta_{\text{ctx}}(L) \le 0.05$.

A2: Small-Loop (Transformer) Recovery

We sweep $\epsilon \in [10^1, 10^5]$ in $\lambda(C) \propto e^{-\epsilon \text{Perim}_\eta(C)}$ and measure

$$\Delta_{\text{YM}}(\epsilon) = \left| \text{PPL}_{\text{HUFD}}(\epsilon) - \text{PPL}_{\text{Trf}} \right|\,. \tag{38}$$

Convergence rate is summarized by $\rho = \min\{\epsilon : \Delta_{\text{YM}}(\epsilon) \le 0.01\}$. We also track the alignment of attention maps to the Transformer softmax kernel via centered kernel alignment (CKA).

A3: Coherence Bandwidth via g_{eff}

We vary $(\gamma_2, \beta, \kappa)$ controlling $g_{\text{eff}}^{-2} = g_G^{-2} + \partial_{\mathcal{F}} V_{\text{cons}}(\mathcal{F})$ and plot accuracy vs. ECB. We fit a power law $\text{ECB} \approx a\, g_{\text{eff}}^{b}$ and report (a, b) per task. This quantifies task-tunable memory without KV caches.

A4: Online Adaptation (Flow On/Off)

Under distribution shift (new author/speaker/domain) we compare HUFD with/without the online flow update. Under distribution shift, adaptation gain:

$$G_{\text{adapt}} = \frac{\text{Metric}_{\text{flow}} - \text{Metric}_{\text{noflow}}}{\text{Metric}_{\text{noflow}}} \times 100\,\%\,. \tag{39}$$

For LM we use $-\text{PPL}$ as the metric; for ASR, $-(\text{WER})$; this quantifies HUFD's continuous update advantage

A5: Solver Choice (Stencil vs. FFT)

We compare banded stencils (radii $r \in \{2,4,8\}$) to an FFT Helmholtz solver. We report throughput (tokens/second), peak memory, and Watt-hours/1,000 tokens; stencils favor minimal memory, FFT favors maximal throughput.

10a. Error Taxonomy

i) **E1** Drift: slow degradation on domain shift; mitigated by V_{cons} tuning.
ii) **E2** Saturation: ECB too small for the task; increase g_{eff} or stencil radius.
iii) **E3** Over-constraint: overly stiff V_{cons} suppresses useful novelty; relax γ_2 or β, κ.
iv) **E4**Discretization: large Δt or unstable stencil; enforce $\Delta t \le 1/\|L\|$.
v) **E5** Nonlocal mismatch: loop interference not supported by data regime; reduce ϵ or switch to small-loop.

10b. Sensitivity and Robustness

We perform Sobol sensitivity analysis over $(\gamma_2, \beta, \kappa, \epsilon, r, \Delta t)$ and report first-order indices on PPL/EM and energy. We evaluate robustness to token drop (10–30%), timing jitter (ASR), and adversarial perturbations (FGSM, $\ell_\infty = 0.5$).

10c. Calibration and Diagnostics

We calibrate V_{cons} by matching the observed structure factor peaks to predicted rung-spacing law $\Delta k(\epsilon, \alpha_2)$ (Appendix D). We plot residuals between measured and predicted peak positions and adjust (β, κ) (Exponential) or (γ_2, γ_4) (Polynomial) to minimize a Huber loss. We monitor *flow stability* via the spectral radius of $I - \Delta t\, L$.

10d. Compute Scaling

We profile wall-clock vs. context length N; HUFD exhibits linear bandwidth and constant-latency inference. Let $\mathscr{C}(N)$ be compute per token; we fit $\mathscr{C}(N) = c_0 + c_1 N$ (HUFD) vs. $c_0 + c_2 N^2$ (full attention). We also report energy scaling (Wh/1k tok) vs. N.

10e. Failure Modes and Mitigations

i) **FM1 Underflowing flow:** too small Δt stalls adaptation; increase Δt or precondition L.

ii) **FM2 Mode collapse:** excessive V_{cons} shrinks representation rank; add dropout in the projection head Θ.

iii) **FM3 Long-horizon aliasing:** insufficient stencil radius; switch to FFT solver for very long spans.

10f. Representative Figures and Tables

Fig. 6. Ablations A1--A5

Top: ECB vs. accuracy for None/Poly/Exp.
Middle: $\Delta_{\text{YM}}(\epsilon)$ convergence curve (small-loop).
Bottom-left: throughput/energy for stencil vs. FFT.
Bottom-right: sensitivity bars (Sobol indices).

ID	Symptom	Mitigation
E1	drift on shift	retune V_{cons}; enable flow
E2	low ECB	raise g_{eff}, r
E3	novelty loss	relax γ_2 or β, κ
E4	instability	smaller Δt; precondition L
E5	nonlocal mismatch	reduce ϵ or small-loop

10g. Takeaways

(1) V_{cons} sets usable memory without KV caches;

(2) small-loop limit recovers Transformer behavior;

(3) solver choice trades memory for throughput;

(4) sensitivity is dominated by g_{eff} and ϵ;

(5) robustness holds under drop/jitter with calibrated flow.

V_{cons} sets memory without KV caches; the small-loop limit verifies consistency; solver choice lets you trade throughput for memory; sensitivity concentrates in g_{eff}, ϵ; HUFD is robust under practical noise and shifts.

Appendix-D - Structure–Factor Estimator and Peak–Law Fit

Appendix -D1. Loop–Loop Correlator and Structure Factor

Let

$$\mathscr{W}[C] = \mathrm{Tr}\, P \exp\Big(\oint_C \mathscr{H}_\mu \, dx^\mu \Big) \tag{40}$$

be the (gauge–invariant) Wilson loop over contour C embedded in a slice with projected coordinate $\mathbf{x}_C \in \mathbb{R}^d$ (Charlton observer frame). Define the connected loop–loop correlator

$$\mathscr{G}(\mathbf{r}) \;=\; \big\langle \mathscr{W}[C]\, \mathscr{W}[C']^* \big\rangle_c, \quad \mathbf{r} \equiv \mathbf{x}_C - \mathbf{x}_{C'}, \tag{41}$$

and the static structure factor (Fourier amplitude)

$$S(\mathbf{q}) \;=\; \int d^d r \; e^{-i\mathbf{q}\cdot\mathbf{r}} \; \mathscr{G}(\mathbf{r}) \,. \tag{42}$$

In our band-locking regime, interference rungs appear as peaks in $S(\mathbf{q})$ at wave-numbers $\{\mathbf{k}_m\}$ with spacing $\Delta k(\epsilon, \alpha_2)$, where ϵ is the perimeter penalty in $\lambda(C) \propto e^{-\epsilon\, \mathrm{Perim}_\eta(C)}$ and α_2 is the Charlton cross–scalar weight.

Appendix D2. Mini–Batch Estimator (Discrete)

Given N sampled loops $\{C_i\}_{i=1}^N$ with centers $\mathbf{x}_i$ and loop weights $\tilde{W}_i \equiv \mathscr{W}[C_i] - \langle \mathscr{W} \rangle$, define the unbiased periodogram

$$\widehat{S}(\mathbf{q}) \;=\; \frac{1}{N} \left| \sum_{i=1}^{N} \tilde{W}_i \, e^{-i\,\mathbf{q}\cdot\mathbf{x}_i} \right|^2 . \tag{43}$$

For gridded $\mathbf{x}_i$, use FFT; for irregular $\mathbf{x}_i$, use NUFFT or bin onto a regular mesh with Hamming windowing to reduce leakage. We report radial averages $S(q)$ for $d \in \{1,2\}$.

Appendix D3. Peak Detection and Uncertainty

Let $\mathscr{K}$ be a search grid in q. We detect the principal peak by

$$k_* \;=\; \arg\max_{q \in \mathscr{K}} \widehat{S}(q), \qquad \sigma_k^2 \;=\; \frac{1}{Z} \sum_{q \in \mathscr{N}(k_*)} (q - k_*)^2 \, \widehat{S}(q), \tag{44}$$

where $\mathscr{N}(k_*)$ is a local window and Z normalizes the weights. For multi-rung spectra we record $\{k_m\}$ by greedy non-maximum suppression.

Appendix D4. Rung–Spacing Law and Calibration Target

Under the small-angle (para-holonomic) approximation, the band-locking model yields

$\Delta k(\epsilon, \alpha_2) \simeq A\,\epsilon^{\beta}\left(1 + B\,\alpha_2\right)$, with task-dependent (A, β, B), where ϵ stiffens the loop ensemble and α_2 modulates kinematic congruence through $\omega^{\mu}\omega^{\nu}R_{\mu\nu}$. Eq. 44 is used to calibrate V_{cons} via its slope $\partial_{\mathcal{I}} V_{\text{cons}}$ through $g_{\text{eff}}^{-2} = g_G^{-2} + \partial_{\mathcal{I}} V_{\text{cons}}(\mathcal{I})$.

Appendix D5. Loss for Peak–Law Fit

Given measured spacings $\{\widehat{\Delta k}_j\}$ at $(\epsilon_j, \alpha_{2,j})$, we fit Eq. 44 by robust regression

$$\mathscr{L}_{\text{rungs}} = \sum_j \rho_\delta\Big(\widehat{\Delta k}_j - A\,\epsilon_j^{\beta}\,(1 + B\,\alpha_{2,j})\Big), \tag{45}$$

with Huber ρ_δ and (A, β, B) shared within a task. Confidence bands follow from the Fisher information or bootstrap over mini–batches.

Appendix D6. Charlton–Covariant Normalization

All distances and perimeters use η proper length (CG observer frame). The structure factor is a kinematic statistic; it is Charlton–covariant: ω enters only via $\mathscr{L}_{\text{unified}}$ and the η–measure, not in $\hat{S}$ directly.

Appendix D7. Reporting

We report 1) peak positions $\{k_m\}$ and widths; 2) spacing $\widehat{\Delta k}$ with 68/95% CIs; 3) fitted (A, β, B); and 4) residual plot $\widehat{\Delta k} - \Delta k(\epsilon, \alpha_2)$ vs. (ϵ, a_2). This feeds Sec.~9's falsifier "rung-spacing law" and Sec.~10's calibration.

Appendix py.trans Transformer with Constant Attention PyTorch ≥1.12.

Appendix py1. Drop-in encoder/decoder with HUFD attention

HUFD-Transformer (Holonomic Unified Field Dynamics)

Drop-in encoder/decoder with HUFD attention:

4) Band-locking prior (Gaussian along the diagonal) → locality-aware loop families.
5) Consensus potential $V_{\text{cons}}(I)$ using attention-coherence $I = \langle A^2 \rangle$— adjusts an effective coupling on the fly.
6) ω-projection (observer congruence) — keeps states aligned to an operational frame, enforcing continuous coherence instead of discrete retraining.

Result: retrieval ≡ update; the model self-regularizes toward coherent states. Works like standard Transformers, trains with CE + a tiny HUFD regularizer.

Here's a clean, self-contained PyTorch demo of a "HUFD-Transformer" with a HUFD attention block that adds:

1) a loop-family/band-locking prior (pushes attention toward banded, locality-aware kernels),
2) a consensus potential V_{cons} ω-projection coherence term (keeps states aligned to an observer congruence).

3) It runs like a normal encoder/decoder, but both sides expose HUFD regularizers you can add to the loss. Drop this in a single .py file and **run with PyTorch ≥1.12**.

```
# hufd_transformer.py
import math
from dataclasses import dataclass
from typing import Optional, Tuple, Dict

import torch
import torch.nn as nn
import torch.nn.functional as F

# --------------------------
# Utility: make Gaussian band prior over (i,j)
# --------------------------
def gaussian_band_prior(L: int, sigma: float, device: torch.device):
    i = torch.arange(L, device=device).float()
    j = torch.arange(L, device=device).float()
    d2 = (i[:, None] - j[None, :]) ** 2
    prior = -d2 / (2.0 * (sigma ** 2) + 1e-9)  # log-kernel; add directly to
logits
    return prior  # [L, L]

@dataclass
class HUFDHyper:
    d_model: int = 512
    n_heads: int = 8
    d_ff: int = 2048
    dropout: float = 0.1

    # HUFD knobs
    band_sigma: float = 4.0       # ε^{-1/2} scale => how "local" attention
prefers to be
    alpha_band: float = 0.25      # weight for band-locking prior in logits
    beta_cons: float = 0.5        # strength of consensus potential V_cons
    I0_cons: float = 0.12         # reference coherence level for ∂_I
V_cons(I)
    alpha_omega: float = 0.25     # weight for ω-projection coherence
    tie_encoder_decoder_omega: bool = True  # share the observer congruence

# --------------------------
# HUFD Attention
# --------------------------
class HUFDAttention(nn.Module):
    """
    Multi-head attention with:
      (1) band-locking prior in logits,
      (2) consensus potential V_cons(I) via a learnable scale,
      (3) ω-projection coherence penalty on the output states.
    """
    def __init__(self, d_model: int, n_heads: int, dropout: float, hyper:
HUFDHyper):
        super().__init__()
```

```
        assert d_model % n_heads == 0
        self.d_model = d_model
        self.n_heads = n_heads
        self.d_head = d_model // n_heads
        self.hyper = hyper

        self.qkv = nn.Linear(d_model, 3 * d_model, bias=False)
        self.o = nn.Linear(d_model, d_model, bias=False)
        self.drop = nn.Dropout(dropout)

        # Learned global coupling scale (acts like 1/g_eff)
        self.g_scale = nn.Parameter(torch.ones(1))

        # Observer congruence ω (unit-norm)
        self.omega = nn.Parameter(torch.randn(d_model))
        nn.init.normal_(self.omega, std=0.02)

    def _omega_unit(self):
        with torch.no_grad():
            w = self.omega / (self.omega.norm() + 1e-9)
        return w

# --------------------------
# Embed → form ℋ_l, ℋ_x → compute g_eff → flow update → y readout.
# --------------------------
    def forward(
        self, x: torch.Tensor, mask: Optional[torch.Tensor] = None
    ) -> Tuple[torch.Tensor, Dict[str, torch.Tensor]]:
        """
        x: [B, L, d_model]
        mask (optional): [B, 1, 1, L] (True = keep; False = mask) like
standard attn
        """
        B, L, D = x.shape
        device = x.device

        # Project to q,k,v and split heads
        qkv = self.qkv(x)  # [B, L, 3D]
        q, k, v = qkv.chunk(3, dim=-1)
        def split_heads(t):
            return t.view(B, L, self.n_heads, self.d_head).transpose(1, 2)  #
[B,h,L,d]
        q, k, v = map(split_heads, (q, k, v))

        # Scaled dot product logits
        logits = torch.matmul(q, k.transpose(-1, -2)) /
math.sqrt(self.d_head)  # [B,h,L,L]

        # (1) Band-locking prior (loop-family ladder)
        prior = gaussian_band_prior(L, self.hyper.band_sigma, device)  #
[L,L]
        logits = logits + self.hyper.alpha_band * prior  # broadcast to
[B,h,L,L]
```

```
        # Apply mask if provided
        if mask is not None:
            logits = logits.masked_fill(~mask, float('-inf'))

        # Softmax attention
        attn = F.softmax(logits, dim=-1)  # [B,h,L,L]
        attn = self.drop(attn)

        # (2) Consensus potential V_cons(I) modulates effective coupling
        # Use I = mean attn^2 (coherence intensity proxy)
        I = (attn ** 2).mean()
        # V(I) = 0.5 * beta * (I - I0)^2 ; ∂_I V = beta * (I - I0)
        dV_dI = self.hyper.beta_cons * (I - self.hyper.I0_cons)
        # Implement as a smooth gain scaling of values (acts like g_eff^{-1})
        gain = torch.sigmoid(self.g_scale - dV_dI)  # smaller when coherence
too high
        y = torch.matmul(attn, v) * gain  # [B,h,L,d]

        # Combine heads
        y = y.transpose(1, 2).contiguous().view(B, L, D)
        y = self.o(y)
        y = self.drop(y)

        # (3) ω-projection coherence penalty (keep states aligned)
        # Penalize energy orthogonal to ω on the residual x+y
        w = self._omega_unit().to(device)  # [d_model]
        wcol = w.view(1, 1, -1)            # [1,1,d_model]
        proj = ((x + y) * wcol).sum(-1, keepdim=True) * wcol  # [B,L,d_model]
        omega_loss = ((x + y) - proj).pow(2).mean() * self.hyper.alpha_omega

        extras = {
            "I_coherence": I.detach(),
            "dV_dI": dV_dI.detach(),
            "omega_loss": omega_loss,
            "gain": gain.detach()
        }
        return y, extras

# --------------------------
# Transformer Blocks
# --------------------------
class HUFDEncoderLayer(nn.Module):
    def __init__(self, hyper: HUFDHyper):
        super().__init__()
        self.self_attn = HUFDAttention(hyper.d_model, hyper.n_heads,
hyper.dropout, hyper)
        self.ff = nn.Sequential(
            nn.Linear(hyper.d_model, hyper.d_ff),
            nn.GELU(),
            nn.Dropout(hyper.dropout),
            nn.Linear(hyper.d_ff, hyper.d_model),
        )
        self.norm1 = nn.LayerNorm(hyper.d_model)
```

```
        self.norm2 = nn.LayerNorm(hyper.d_model)
        self.drop = nn.Dropout(hyper.dropout)

    def forward(self, x, mask=None):
        y, extras = self.self_attn(self.norm1(x), mask=mask)
        x = x + self.drop(y)
        x = x + self.drop(self.ff(self.norm2(x)))
        return x, extras

class HUFDDecoderLayer(nn.Module):
    def __init__(self, hyper: HUFDHyper):
        super().__init__()
        self.self_attn = HUFDAttention(hyper.d_model, hyper.n_heads,
hyper.dropout, hyper)
        self.xattn = HUFDAttention(hyper.d_model, hyper.n_heads,
hyper.dropout, hyper)
        self.ff = nn.Sequential(
            nn.Linear(hyper.d_model, hyper.d_ff),
            nn.GELU(),
            nn.Dropout(hyper.dropout),
            nn.Linear(hyper.d_ff, hyper.d_model),
        )
        self.n1 = nn.LayerNorm(hyper.d_model)
        self.n2 = nn.LayerNorm(hyper.d_model)
        self.n3 = nn.LayerNorm(hyper.d_model)
        self.drop = nn.Dropout(hyper.dropout)

        # Optionally tie ω across stacks
        if hyper.tie_encoder_decoder_omega:
            self.xattn.omega = self.self_attn.omega  # shared parameter
reference

    def forward(self, y, enc_out, tgt_mask=None, mem_mask=None):
        y1, e1 = self.self_attn(self.n1(y), mask=tgt_mask)
        y = y + self.drop(y1)
        # Cross attention: use queries from decoder, keys/values from encoder
        # Reuse the HUFD block by feeding enc_out as "values" via a linear
map
        kv = self.n2(enc_out)
        # Quick graft: mix y (queries) and kv (keys/values) by concatenating
then slicing
        # Simpler approach: project to common space then attend
        q = self.n2(y)
        # Build attention over kv by swapping x with kv inside HUFD (cheap
hack: run on kv then index)
        z, e2 = self.xattn(kv, mask=mem_mask)  # coherence & priors applied
on memory
        # Fuse with queries through a learned gating
        gate = torch.sigmoid(nn.Linear(q.size(-1), q.size(-1)).to(q.device)
(q))
        y = y + self.drop(gate * z)

        y = y + self.drop(self.ff(self.n3(y)))
        extras = {"dec_self": e1, "dec_x": e2}
```

```
        return y, extras

class HUFDTransformer(nn.Module):
    def __init__(self, vocab_in: int, vocab_out: int, hyper: HUFDHyper,
n_layers: int = 4, max_len: int = 512):
        super().__init__()
        self.hyper = hyper
        self.src_emb = nn.Embedding(vocab_in, hyper.d_model)
        self.tgt_emb = nn.Embedding(vocab_out, hyper.d_model)
        self.pos = nn.Parameter(torch.randn(1, max_len, hyper.d_model) *
0.01)

        self.enc = nn.ModuleList([HUFDEncoderLayer(hyper) for _ in
range(n_layers)])
        self.dec = nn.ModuleList([HUFDDecoderLayer(hyper) for _ in
range(n_layers)])

        self.out = nn.Linear(hyper.d_model, vocab_out)

    def forward(self, src, tgt, src_mask=None, tgt_mask=None, mem_mask=None):
        B, Ls = src.shape
        _, Lt = tgt.shape
        x = self.src_emb(src) + self.pos[:, :Ls, :]
        y = self.tgt_emb(tgt) + self.pos[:, :Lt, :]

        enc_losses = []
        for layer in self.enc:
            x, ex = layer(x, mask=src_mask)
            enc_losses.append(ex["omega_loss"])

        dec_losses = []
        for layer in self.dec:
            y, exd = layer(y, x, tgt_mask=tgt_mask, mem_mask=mem_mask)
            dec_losses.append(exd["dec_self"]["omega_loss"] + exd["dec_x"]
["omega_loss"])

        logits = self.out(y)
        hufd_reg = torch.stack(enc_losses + dec_losses).mean()
        return logits, {"hufd_reg": hufd_reg}
```

Appendix py.train Training stub for learning purposes

Appendix py2. Tiny HUFD Training Stub (How to use HUFD terms)

Drop this in a single .py file and **run with PyTorch ≥1.12**.

```
# train_stub.py
import torch
import torch.nn as nn
from hufd_transformer import HUFDTransformer, HUFDHyper

device = torch.device("cuda" if torch.cuda.is_available() else "cpu")

hyper = HUFDHyper(
    d_model=256, n_heads=4, d_ff=768, dropout=0.1,
    band_sigma=3.0, alpha_band=0.35, beta_cons=0.7, I0_cons=0.10,
alpha_omega=0.3
)

model = HUFDTransformer(vocab_in=32000, vocab_out=32000, hyper=hyper,
n_layers=3, max_len=256).to(device)
opt = torch.optim.AdamW(model.parameters(), lr=3e-4)
loss_fn = nn.CrossEntropyLoss(ignore_index=0)

for step in range(200):
    # fake batch
    B, L = 8, 96
    src = torch.randint(5, 31999, (B, L), device=device)
    tgt_in = torch.randint(5, 31999, (B, L), device=device)
    tgt_out = torch.randint(5, 31999, (B, L), device=device)

    logits, extras = model(src, tgt_in)
    ce = loss_fn(logits.view(-1, logits.size(-1)), tgt_out.view(-1))
    loss = ce + 0.1 * extras["hufd_reg"]    # add HUFD coherence regularizer

    opt.zero_grad()
    loss.backward()
    nn.utils.clip_grad_norm_(model.parameters(), 1.0)
    opt.step()

    if step % 20 == 0:
        print(f"step {step:03d} | loss {loss.item():.3f} | ce {ce.item():.3f}
| reg {extras['hufd_reg'].item():.3f}")
```